BELL / PENGO STYLE DOWNHOLE LINE SWITCHING RELAY CIRCUIT

SPDT Non-Latching Relay / Transistor Version

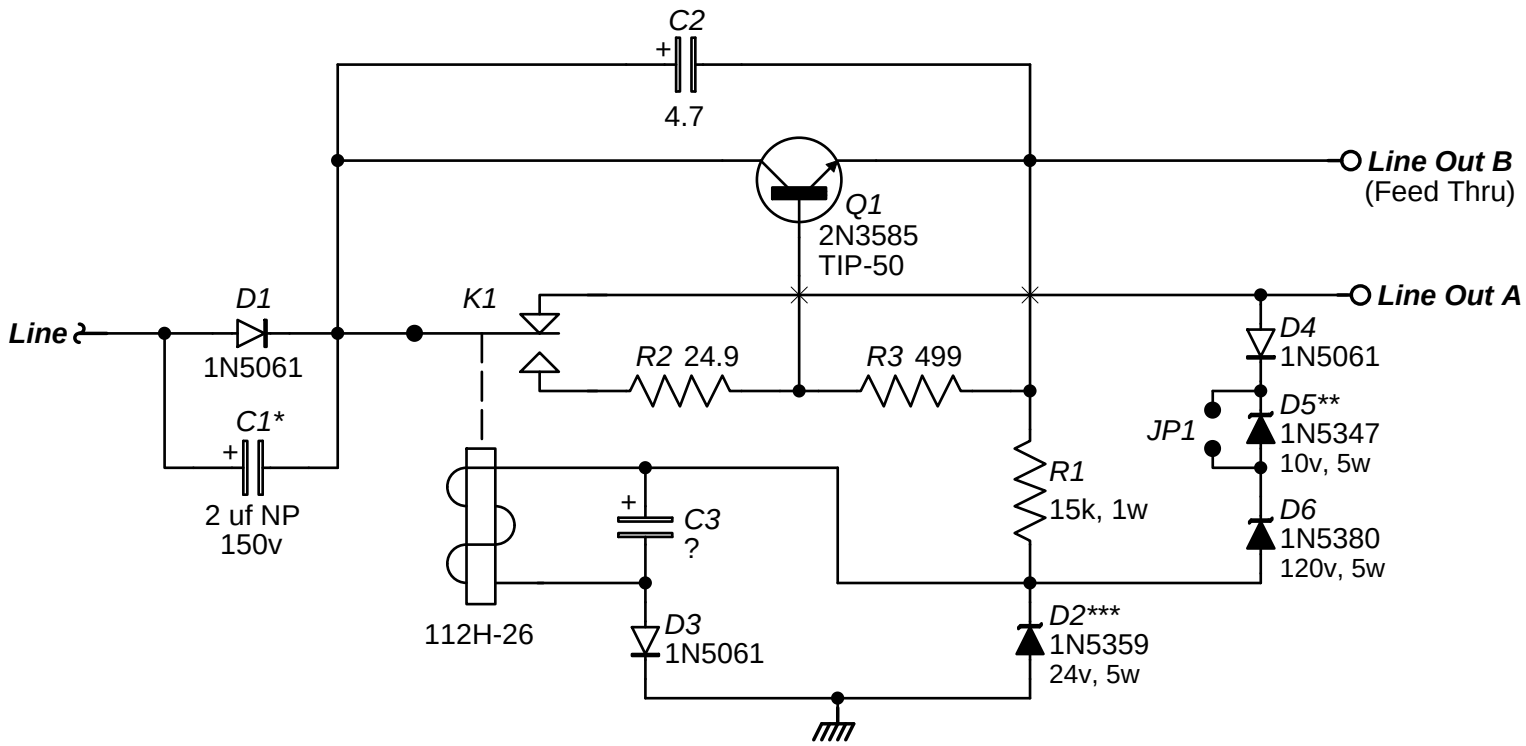

NOTES:

Momentary over-voltage switches line to Output B.
Power down switches back to Output A.

* C1 required for positive pulses only; non-polar preferred.

** D5 optional to increase switching voltage (typical value shown).

*** D2 to match relay coil voltage; use 1N5349 for 12 volt relays.

www.logwell.com PCB: DHSW-3

Copyright 2009 by AnaLog Services, Inc. All rights reserved.
Reproduction is unlawful without express written permission.

AnaLog Services, Inc.
1169 Haynesville Road - Reynolds Station, KY 42368 (270) 276-5671 Fax: (270) 276-5588

Downhole Line Switch		DHSW3.sch
Sheet Size: A	Creation Date: 03/18/2009	Drawn By: Syd H. Levine
Revision: 1.0	Modify Date: 11/16/2009	Sheet 1 of 1