CCL METER

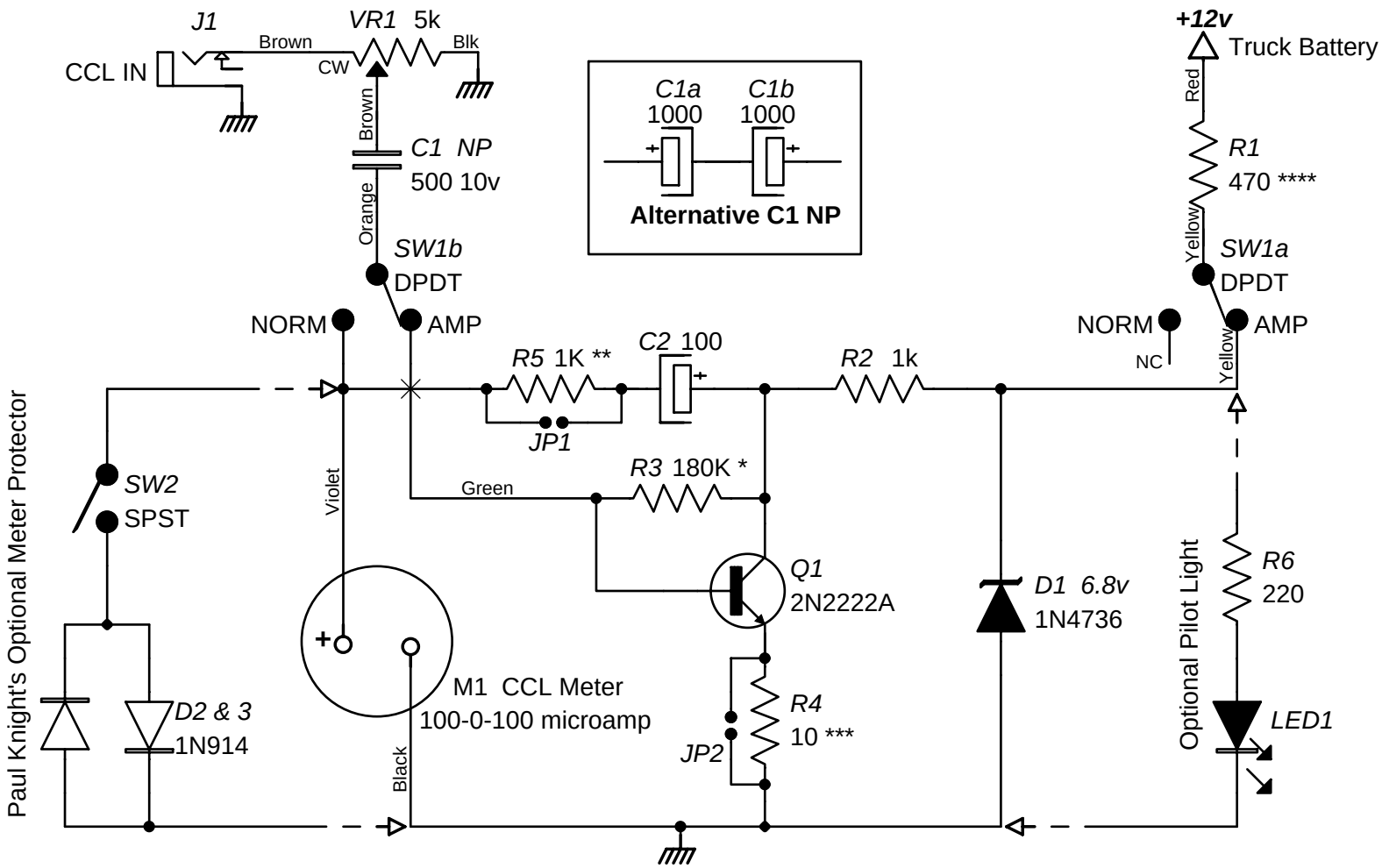

Copyright 2000 by AnaLog Services, Inc. All rights reserved.
Reproduction is unlawful without express written permission.

NOTES:

* Select R3 for approximately 3 volts at collector (not critical).

** Omit R5 if M1 is to be a 500-0-500 microamp meter (shunt JP1).

*** Omit emitter resistor R4 for maximum gain (shunt JP2).

**** R1 is 200 ohms when using the optional LED pilot.

www.logwell.com

AnaLog Services, Inc.
1169 Haynesville Road - Reynolds, Station, KY 42368 (270) 276-5671 Fax: (270) 276-5588

CCL Meter		CCLM1a.sch
Sheet Size: A	Creation Date: 10/21/2000	Drawn By: Syd H. Levine
Revision: 1.0	Modify Date: 08/03/2007	Sheet 1 of 1