TEMPERATURE TOOL SIMPLE VFC

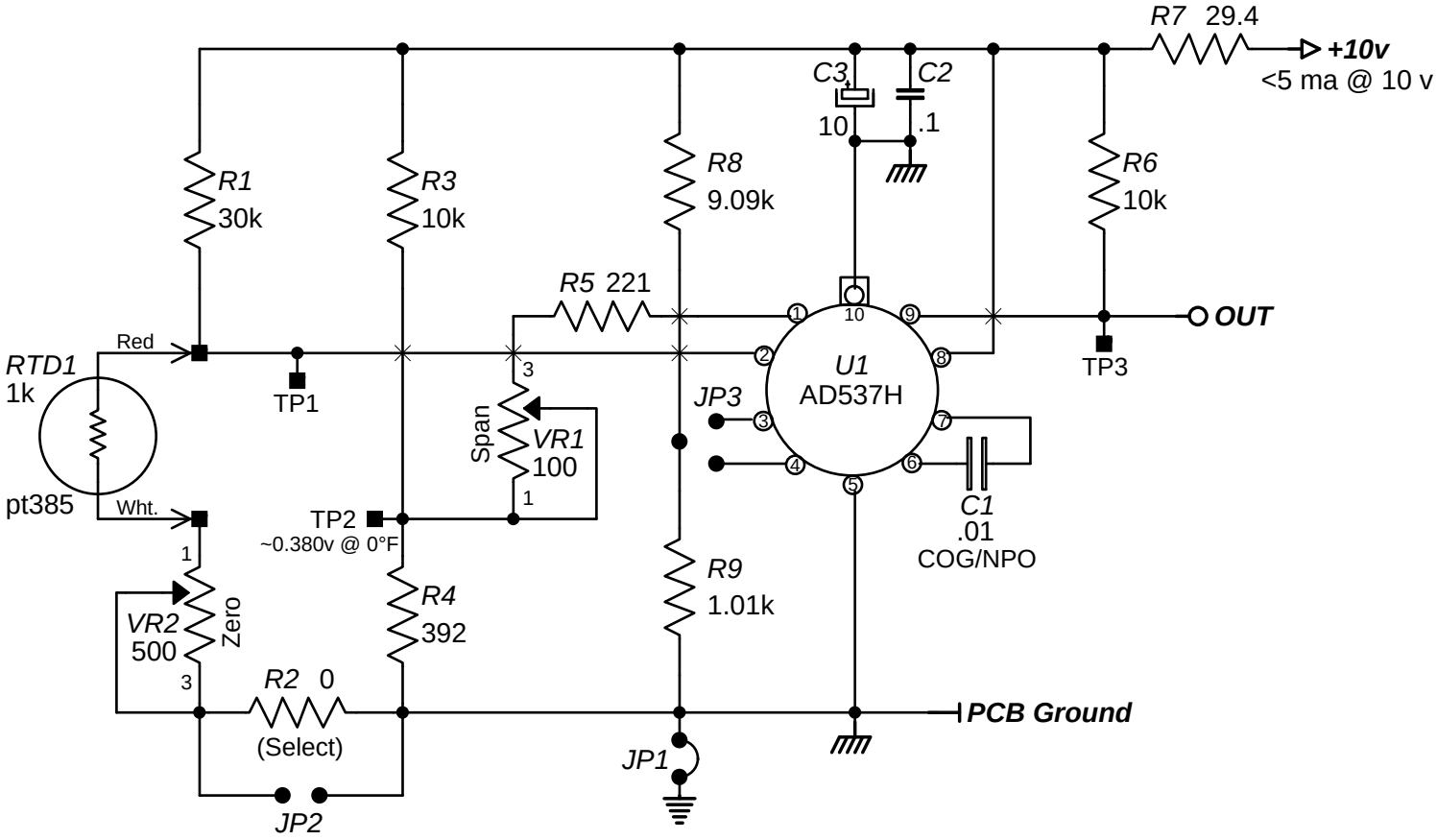

Copyright 2008 by AnaLog Services, Inc. All rights reserved.
Reproduction is unlawful without express written permission.

AnaLog Services, Inc.
1169 Haynesville Road - Reynolds Station, KY 42368 (270) 276-5671 Fax: (270) 276-5588

Temp. Tool Simple VFC		VFC2d.sch
Sheet Size: A	Creation Date: 11/16/2008	Drawn By: Syd H. Levine
Revision: 1.0	Modify Date: 11/13/2009	Sheet 1 of 1

www.logwell.com

PCB: VFC-2b